System Power Supply 3.3V

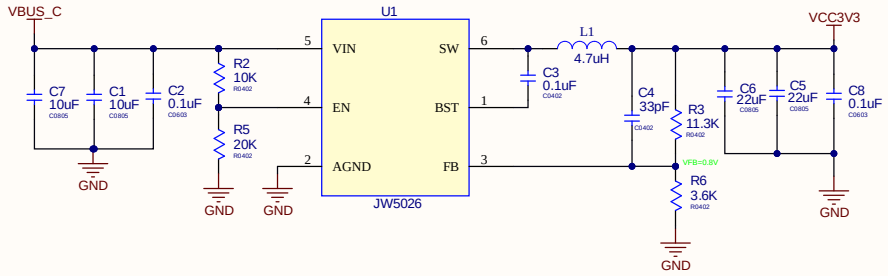

USBC Connector

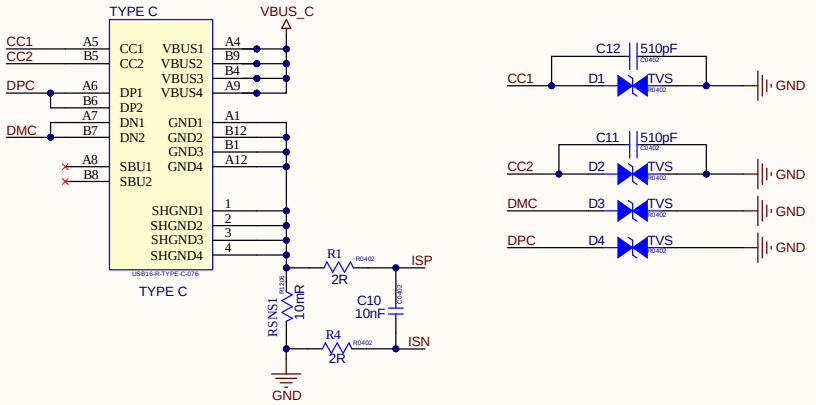

UM3500F Controller

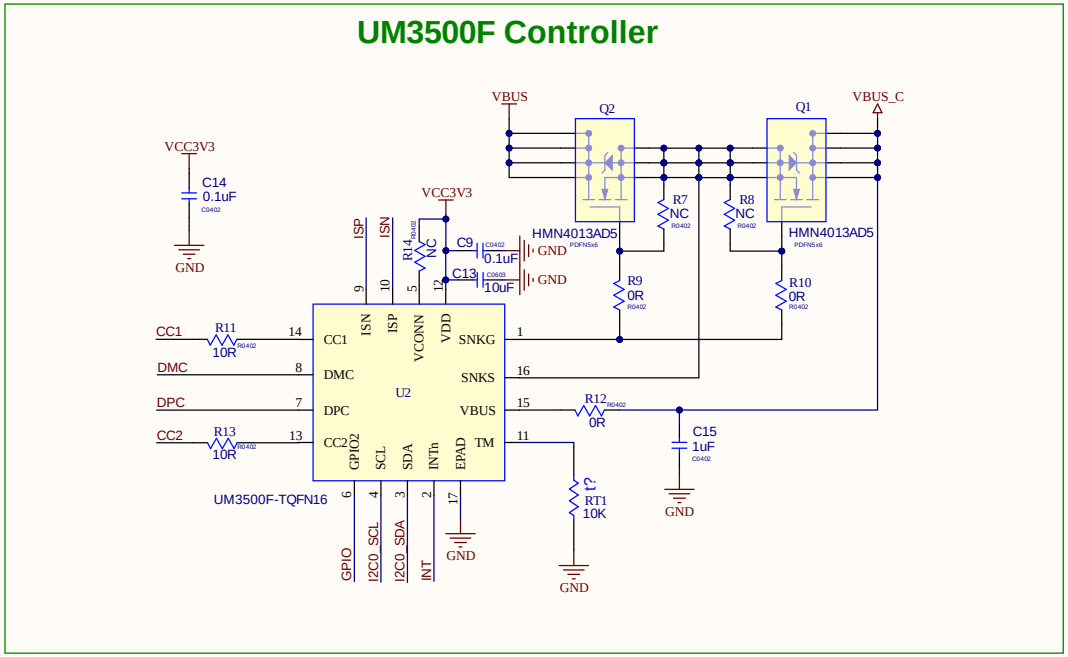

Connector & Testpoint

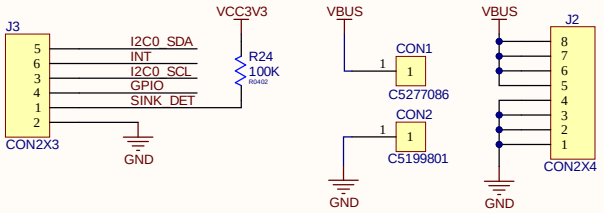

Title		
Size: B	Number	Revision
Date: 1/17/2024	Sheet of	
File: E:\WORKING\..\UM3500F DP_ALT-SINK_V3.0.SchDoc	Drawn By:	